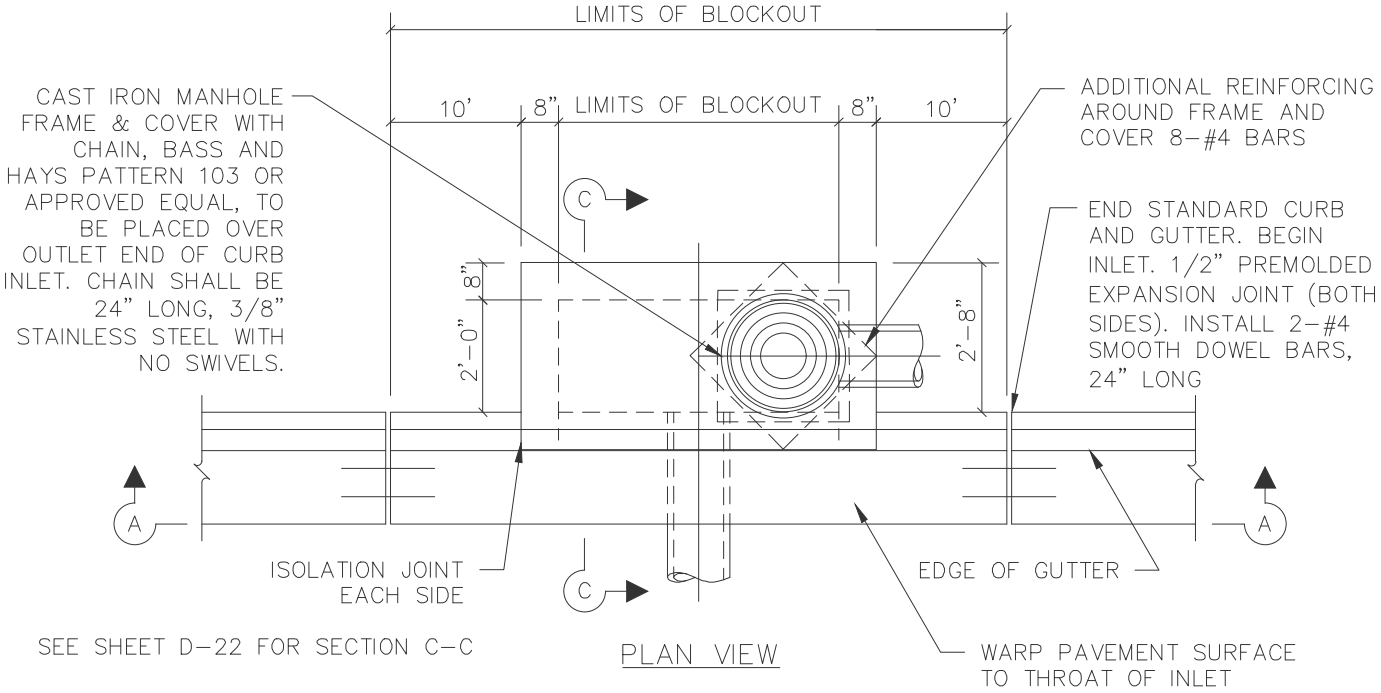

SEE SHEET D-22 FOR SECTION C-C

PLAN VIEW

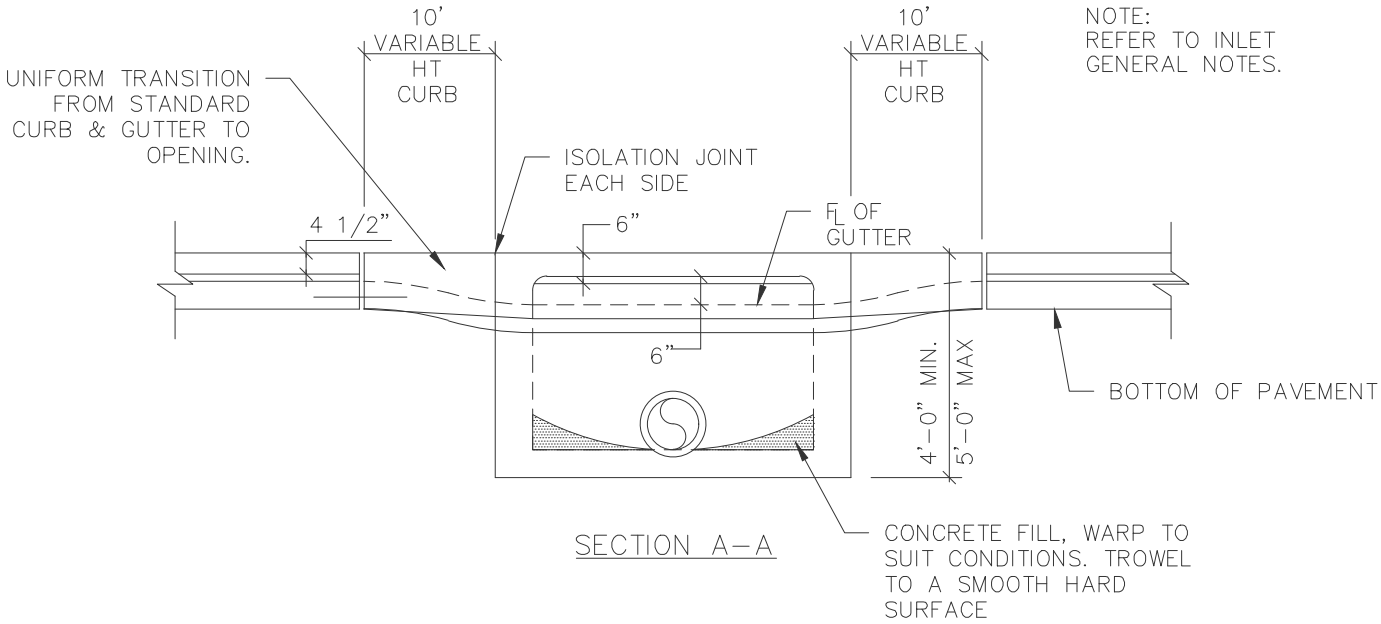

SECTION A-A

NOTE: IF INLET LENGTH IS GREATER THAN 10'-0", PLACE TWO (2) MANHOLE FRAMES AND COVERS ON TOP OF INLET BOX.

City of KELLER	STORM DRAIN CONSTRUCTION DETAILS STANDARD STORM DRAIN CURB INLET	REVISION DATE: 2/1/2024 SHEET: D-19