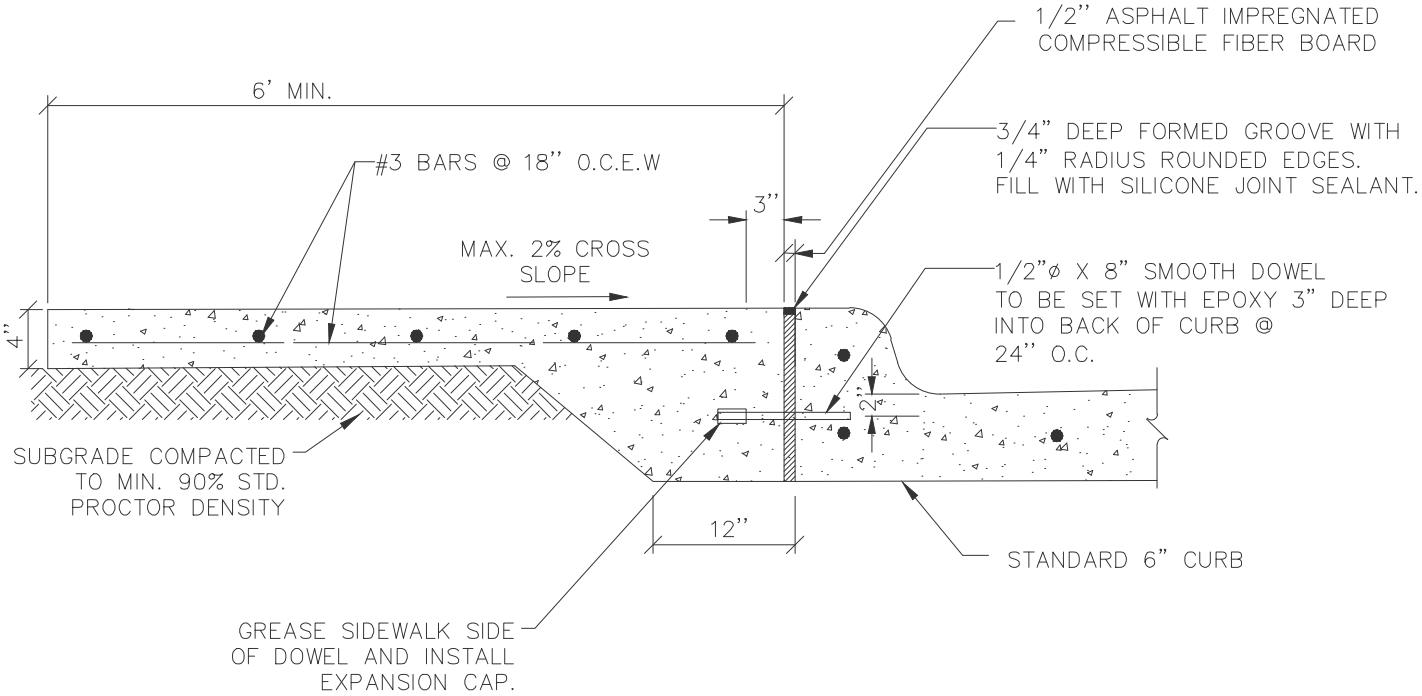

City of KELLER	PAVING CONSTRUCTION DETAILS CURB-TO-SIDEWALK TRANSITION	REVISION DATE: 2/1/2024 SHEET: P-06