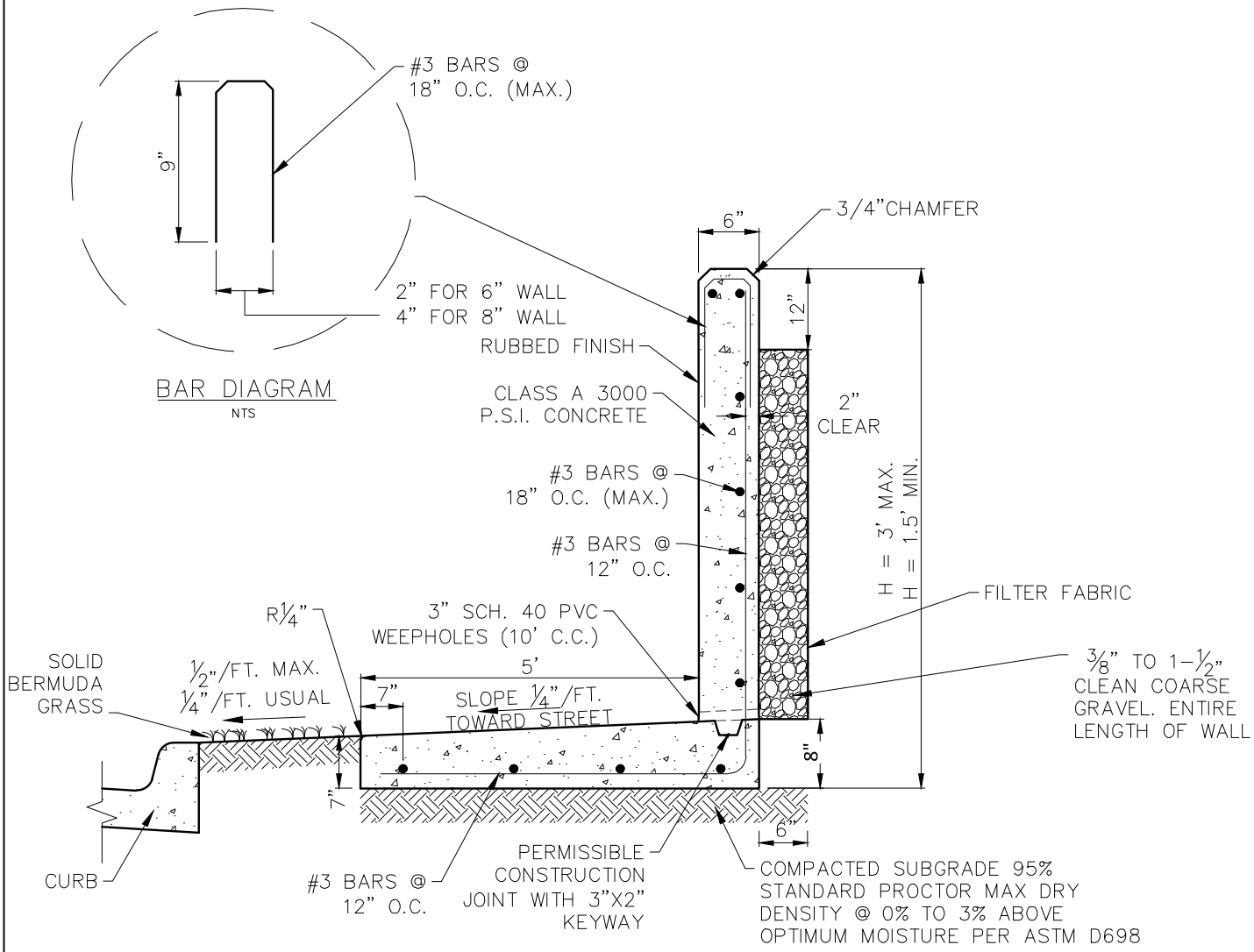

SIDEWALK WITH INTEGRAL RETAINING WALL
NTS

NOTE:
1. PROVIDE VERTICAL EXPANSION JOINT WITH WATER STOPS IN WALL AT 25' MAX. SPACING.

City of KELLER	PAVING CONSTRUCTION DETAILS SIDEWALK WITH INTEGRAL RETAINING WALL	REVISION DATE: 2/1/2024 SHEET: P-32